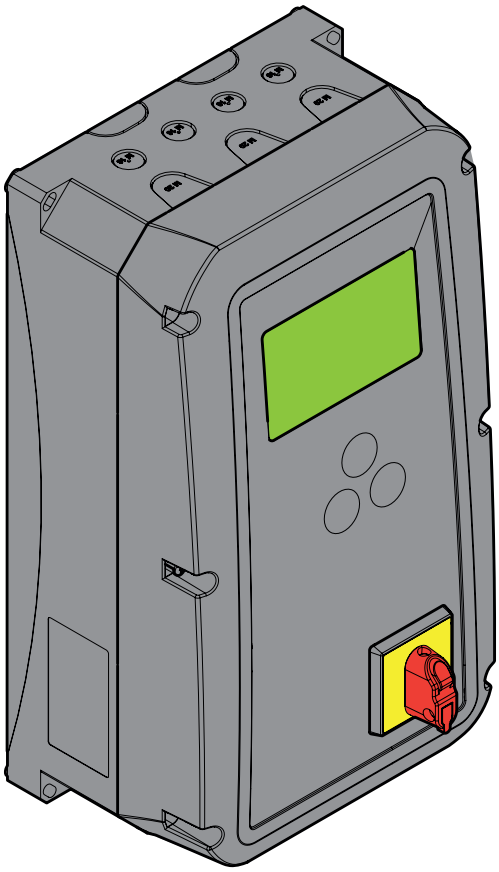

GIGAdock A-T
GIGAdock A-H

Loading ramp control system

EN Translation of the Original Installation and Operating Manual

Download the current manual:

GIGAdock_S15427-00001-222026-0-DRE-Rev-A_EN

Table of contents

Allgemeine Angaben ... 3
- Symbole ... 3
- Sicherheitshinweise ... 3
  - allgemein ... 3
  - zur Lagerung ... 3
  - für den Betrieb ... 3
- Typenschild ... 4
- Bestimmungsgemäße Verwendung ... 4
- Lieferumfang ... 4
- Abmessungen Gehäuse (B x H x T) ... 4

Allgemeine Angaben ... 4
- Technische Daten ... 5

Montagevorbereitungen ... 6
- Sicherheitshinweise ... 6
- Persönliche Schutzausrüstung ... 6
- Hinweise zur Montage ... 6

Elektrischer Anschluss ... 8
  - Softwareaktualisierung per USB ... 9

Elektrischer Anschluss ... 10
- Netzanschluss ... 10

Elektrischer Anschluss ... 11
- Netzanschluss ... 11
  - 3 - Phasen - Betrieb ... 11
- Sicherheitskette ... 12
- Radkeil ... 12
- LKW Sensor ... 12
- Endschalteranschluss Tor ... 13
- Endschalter Lippe eingefahren ... 13
- Frei programmierbare Eingänge ... 13
- Ampelanschluss 24 V DC ... 13
- Ampelanschluss 230 V ... 14
- 24 V für externe Geräte ... 14
- ZU - Befehl an Torsteuerung ... 14
- AUF - Befehl an Torsteuerung ... 14
- Torverriegelung ... 14
- Verladeleuchte 230 V ... 15
  - An Relais 1-5 ... 15
  - An Relais 7 ... 15
- Alarmausgang ... 15
- Rohrmotor für Torabdichtung ... 16
- Aufblasbare Torabdichtung (Shelter) ... 16
- 230 V für externe Geräte ... 16

Inbetriebnahme ... 17
- Hauptmenü ... 18
- Sprache ... 19
- Rampentyp ... 21
- Bewegungszeiten ... 24
- Relaisfunktionen ... 26
- Ampelfunktionen ... 29
- Torabdichtung ... 31
- Absenken ... 33
- Autoreturn ... 35
- Radkeil ... 37
- Anfahrsensor ... 39
- Tor ... 41
- Eingänge ... 43
- Stromerkennung ... 45
- Servicemenü ... 47

EG-Einbauerklärung ... 49

General information

Symbols

CAUTION SYMBOL:
Important safety instructions!
Caution - to ensure the safety of personnel, it is important to observe all instructions. Save these instructions!

IMPORTANT INFORMATION SYMBOL:
Information, useful advice!

1 (1) **Refers to a respective picture in the introduction or main text.**

Safety instructions

General

- This installation and operating manual must be read, understood and complied with by persons who install, use or perform maintenance on the control unit.
- Installation, connection and initial commissioning of the control unit may only be carried out by a trained electrician.
- The system manufacturer is responsible for the complete system. The system manufacturer must ensure that all applicable standards, directives and regulations applicable at the installation site are observed. In addition to other items, the system manufacturer must test and maintain the maximum approved closing forces in accordance with EN 12445 (Safety in use of power operated doors, test methods) and EN 12453 (Safety in use of power operated doors, requirements). The system manufacturer is responsible for preparation of technical documentation for the complete system, and the documentation must accompany the system.
- All electrical wires must be fitted tightly and secured against shifting.
- The manufacturer accepts no liability for damage or malfunctions resulting from a failure to observe the installation and operating manual.
- Before initial operation, ensure that the mains connection matches the specifications on the type plate. If this is not the case, the control unit must not be operated.
- In the case of a three-phase current connection, make sure that the direction of rotation is clockwise.
- Installations with a fixed mains connection require an all-phase mains circuit breaker with appropriate fuse protection.
- Keep the installation instructions within reach.
- Always ensure that the accident prevention regulations and current standards in each country are observed and complied with.
- Read and comply with the "ASR A1.7 Technical Regulations for Workplaces" of the committee for workplaces (ASTA). (Applicable for the operator in Germany, observe and comply with the applicable regulations in other countries).
- Before working on the control unit, always disconnect the power plug or disconnect the mains voltage at a main switch (lock to prevent reactivation).
- Regularly check power cables and wires for insulation defects or cracks. If a wiring fault is found, switch off the power immediately and repair the faulty cable or wire.
- Before switching on the voltage supply for the first time, make sure that the plug-in terminals are in their correct positions, otherwise the control unit may malfunction or be damaged.
- Observe the requirements of the local power supplier.
- Only use permissible mounting materials appropriate for the supporting surface.
- Only use original spare parts from the manufacturer.

Storage

- The control unit must be stored in an enclosed, dry area at a room temperature of -25° to +65°C at a maximum relative humidity of 90% (non-condensing).

Operation

- After installation and initial operation, all users must be instructed in the function and operation of the system. All users must be informed of the hazards and risks inherent in the system.
- No persons, vehicles or objects may be present on the dock leveller while the dock leveller is in operation.
- Always keep an eye on the moving dock leveller and ensure that people and vehicles stay clear of it
- The control unit must be adjusted to ensure safe operation in conformity with the standards.
-

General information

Type plate

- The type plate is attached to the control unit housing.
- The type plate shows the exact type designation and the date of manufacture (month/year) of the control unit.

Intended use

- The GIGAdock control unit is designed exclusively for operating dock levellers with a hinge or telescopic lip.
- Systems with 1, 2 or 3 solenoid valves can be controlled.
- Only command devices and sensors in perfect technical condition may be connected, and they must be used for the intended purpose, with an awareness of the hazards involved and in accordance with the instructions in the installation and operating manual.
- Use is permitted only:
  - provided the unit is in perfect working order,
  - once it has been installed correctly,
  - in accordance with the specifications set out in the technical data.

The following optional control unit types are available:

- 3 buttons for folding wedge lips with Autoreturn
- 4 buttons for feed lips with Autoreturn
- Emergency stop switch
- Main switch

Scope of delivery

The actual scope of supply may vary depending on the control unit version.

Dimensions of housing (W x H x D)

Approx. 200 x 350 x 135 mm

GIGAcontrol A

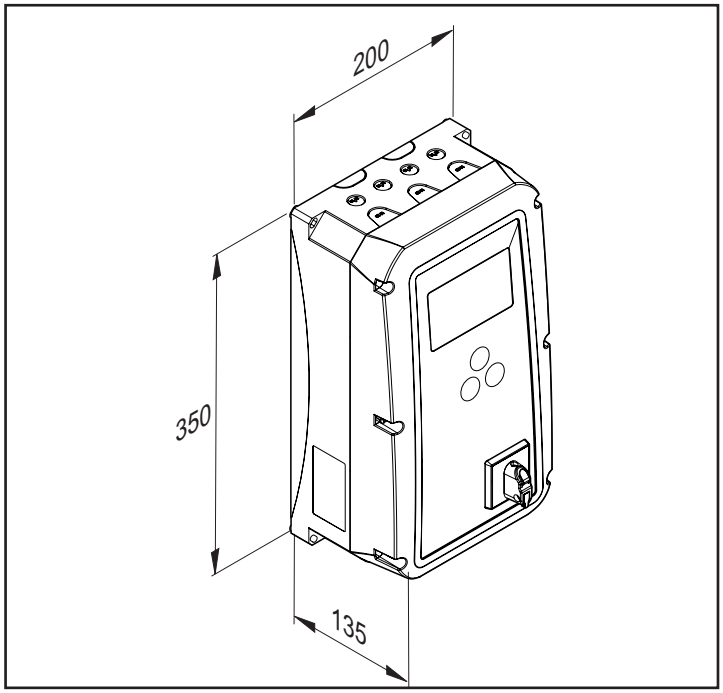

Technical Data

Dimensions	350 x 200 x 135 mm (H x W x D)
Operating voltage*	1 ~ 100 - 250 V AC 50/60 Hz 3 ~ 230 V AC (+/- 10%) 50/60 Hz 3 ~ 400 V AC (+/- 10%) 50/60 Hz
Mains feed fuse	3 x 6.3 A T (internal)
Control voltage	24 V DC max. load 500 mA*
Control voltage fuse	500 mA self-resetting
Temperature range	-25 ºC to +65 ºC
Connection cross-section	1.5 mm^2
Switching capacity	2.2 kW / 2 kVA max.
IP code	IP54 / optionally IP65

Installation preparations

Safety instructions

CAUTION!
Important instructions for safe installation. Observe all installation instructions – improper installation can lead to serious injuries!

CAUTION! RISK OF DEATH!
Remove all cords or straps necessary to operate the door by hand.

CAUTION!
Important instructions for safe installation. Observe all installation instructions – improper installation can lead to serious injuries!

CAUTION!
Control or regulating units (buttons) in a fixed position must be mounted within sight of the door. However, they must not be situated near moving parts and must be fitted at a height of at least 1.5 m.

CAUTION!
After installation, it is imperative that you check that the operator has been correctly adjusted and that it reverses at the specified measuring points.

- Use only suitable tools.
- The power cord that has been provided must not be shortened or extended.
- Before initial operation, ensure that the mains connection matches the specifications on the type plate. If this is not the case, the control unit must not be operated.
- All devices to be connected externally must have a safe isolation of the contacts from the mains voltage supply according to EC 60364-4-41.
- Wiring for external devices must be installed in accordance with IEC 60364-4-41.
- Live parts of the control unit must not be connected to earth or to live parts or protective earthing conductors of other electrical circuits.
- The control unit should be mounted on a low-vibration surface (e.g., a brick wall) to eliminate vibrations which could have a negative effect on it over time.
- The operator may only be installed, connected and taken into operation by technical specialists.
- Only move the door if there are no people, animals or objects within its range of movement.
- Keep disabled persons and animals away from the door.
- Wear safety glasses when drilling the fastening holes.
- When drilling, cover all openings to prevent the ingress of dirt.
- Before opening the housing, make sure that drilling chips or any other material cannot fall into the housing.
- All electrical wires must be fitted tightly and secured against shifting.
- Before installing the control unit, inspect it for transport damage and any other damage.
  - ⇒ Never install a damaged control unit! Serious injuries may result!
- Keep the system disconnected from the power supply when installing the control unit.
- Electronic components may be damaged by electrostatic discharge when touched.
  - ⇒ Do not touch the electronic components of the control unit (boards etc.)!
- Close off unused cable inserts with suitable material to maintain protection class IP54 and/or IP65!

Personal protective equipment

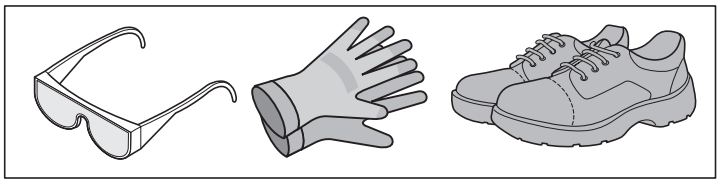

- safety glasses (for drilling).
- Work gloves
- safety shoes

Information on installation

CAUTION!
Before working on the control unit, always disconnect the power plug or disconnect the mains voltage at a main switch (lock to prevent reactivation).

CAUTION!

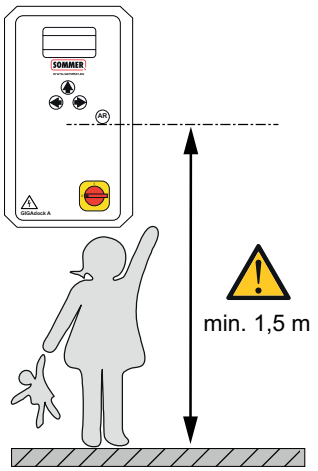

- For indoor use (see data regarding temperature and IP protection class).
- The supporting surface must be flat and low-vibration.
- Mount the control unit housing vertically.

Installation preparations

NOTE:
The dimensions specified here are the dimensions for drilling the fastening holes.
Housing dimensions: See the "Dimensions" section.

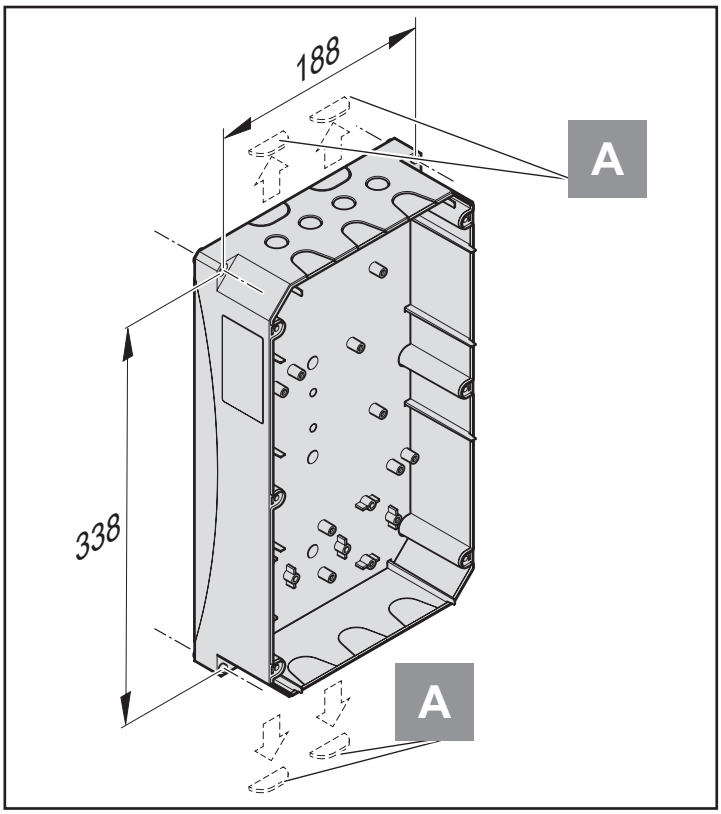

NOTE:
The cable feedthroughs (A) can be easily opened without damaging the housing! This allows cables to be routed behind the control unit housing and fed in from below!

- Only use permissible mounting materials appropriate for the supporting surface.
- Attach housing to the supporting surface correctly.
- Use suitable tools.

Electrical connection

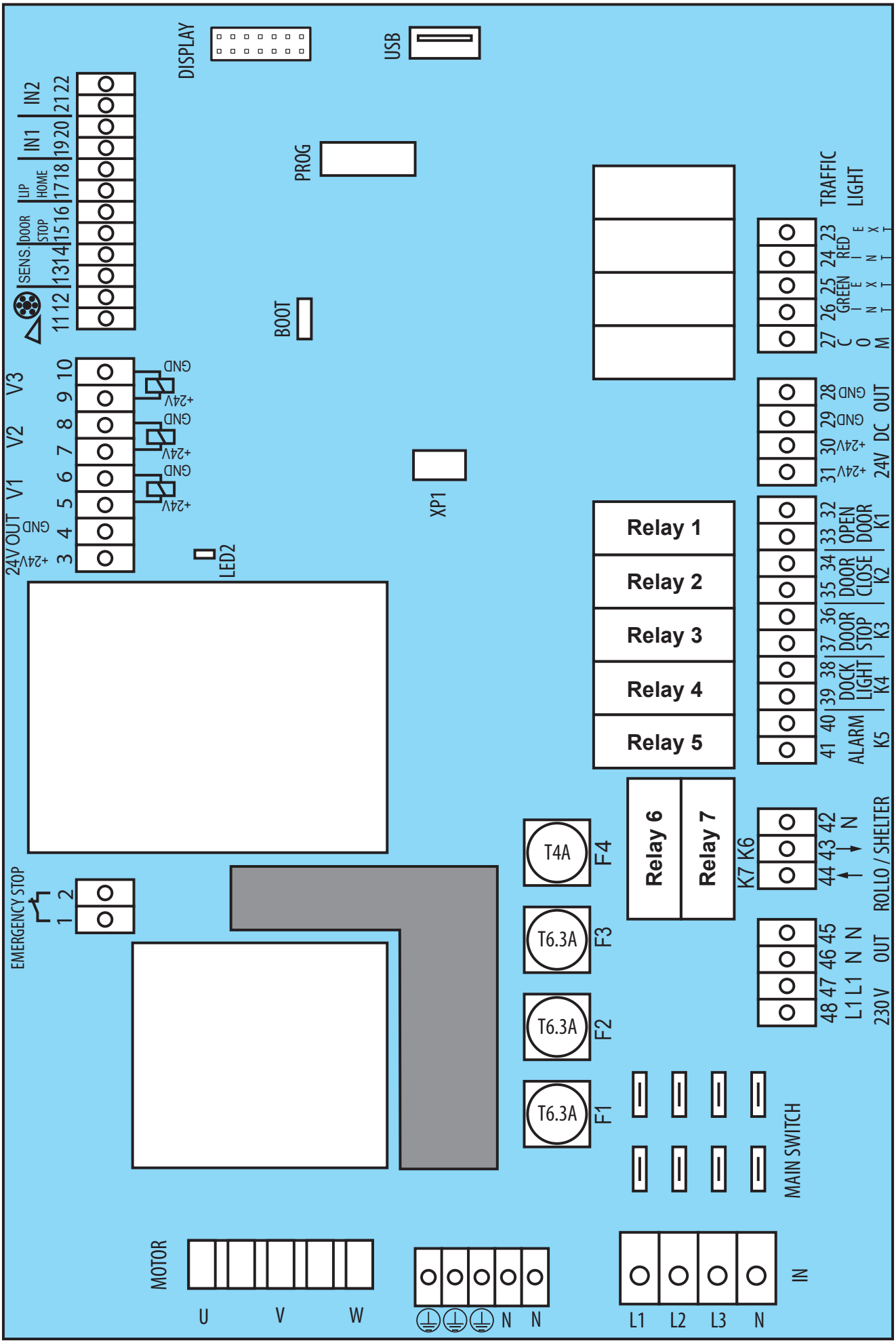

Electrical connection

Element	Connection
1–2	Thermal contact / Emergency stop
3–10	Valves / 24 V external
11–22	Sensors / Limit switches for doors
23–27	Traffic lights
28–31	24 V external, max. 500 mA
32–41	Relay outputs 1–5, alarm, docklight and signals on the door control unit
42–44	Relay outputs 6+7, Shelter/Rollo
45–48	230 V external, max. 2 A
Main Switch	Terminals for the main switch
F1-F3	Mains connection fuses (T6.3A)
F4	Fuses for transformer / external 230 V (T4A)
Motor	Motor terminals
⏚⏚⏚	Terminals for protective earthing conductors
N N	Terminals for neutral conductors
IN	Terminals for mains connection

Software update via USB

The control unit supports firmware updates via a USB interface. This allows software updates and new functions to be installed.

Please contact the manufacturer for the necessary files and instructions on how to carry out the firmware updates. Only approved firmware versions may be used.

Electrical installation

CAUTION!
Electrical work must be performed by qualified electricians only!

CAUTION!
Observe the requirements of the local power supplier.

CAUTION!
The mains cable may only be replaced by the manufacturer, customer service or other qualified electrician!

Mains connection

NOTE:
The connection depends on the mains and the operator with which the control unit will be used!

The control unit is suitable for mains voltages of 1~ 100-250 V 3~400 V or 3~230 V.

The control unit must be protected from short-circuit and overload by a nominal fuse value of max. 10 A per phase.

- A 3-pole automatic circuit breaker must be used with three-phase mains.
- A 1-pole automatic circuit breaker must be used with AC power supplies.

The control unit must have an all-phase mains circuit breaker conforming to EN12453!

This can be:

- a plug connection (max. 1.5 m cable length)

or

- a main switch.

.

NOTE:
The mains circuit breaker must be easily accessible at a height of between 0.6 m and 1.7 m!

The following fuses are required depending on the as-delivered condition:

Control unit without mains plug:
Main switch, automatic circuit breaker on mains side, all poles (max. 10 A).

Control unit with 5-pole CEE plug (16 A):
16A socket (fuse-protected with 3-pole three-phase automatic circuit breaker 3 x 10A).

Control unit with 3-pole CEE plug:
16A socket (fuse-protected with 1-pole automatic circuit breaker 1 x 10A).

Electrical connection

Mains connection

3-phase operation

3 ~ 400 V / Y

3 ~ 230 V / Δ

Motor connection

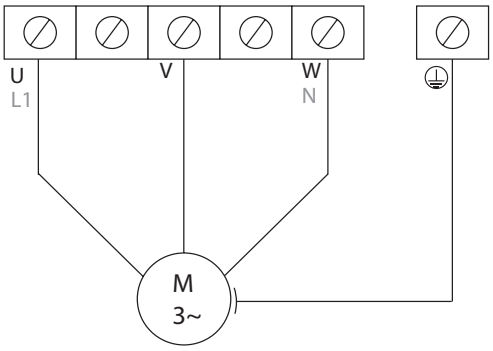

Mains connection

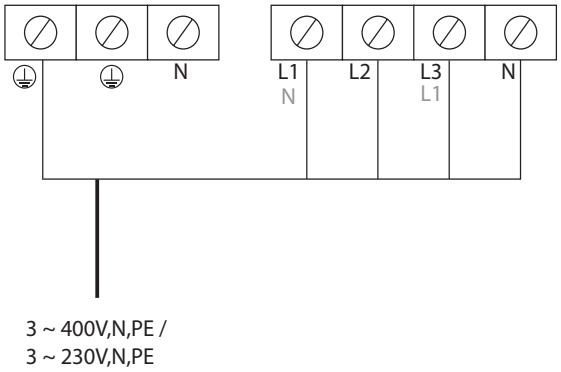

Electrical connection

Safety chain

Thermal contact connection for the pump

NOTE:
If one of the devices connected to EMERGENCY STOP has triggered, the following error message appears on the display: THERMOSTAT SWITCH Triggered. See the "Error messages" section.

EMERGENCY STOP = = Thermostat switch on the hydraulic aggregate or emergency stop button

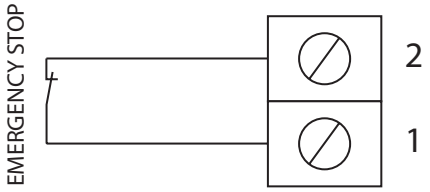

Valve connections

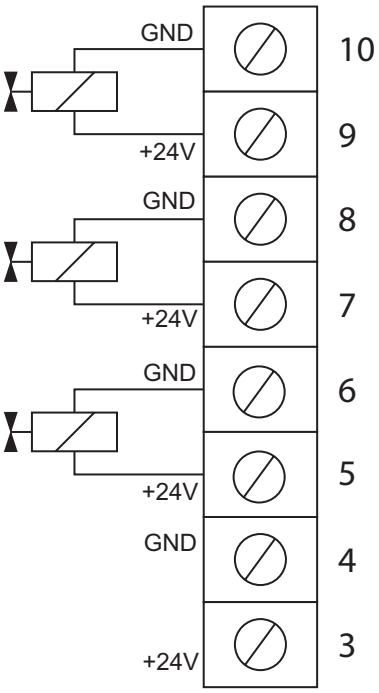

Valve 3 24 V DC
max. 1 A

Valve 2 24 V DC
max. 1 A

Valve 1 24 V DC
max. 1 A

Connection 24 V DC
for ext. devices:
max. 500 mA

Wheel chock

NOTE:
The wheel chock secures the vehicle whilst it is being loaded.

Depending on the version, the wheel chock can be connected either as a normally open (NO) contact or as a PNP open-collector signal.

Activation is carried out via the display or the menu.

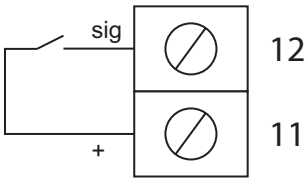

Wheel chock
NO

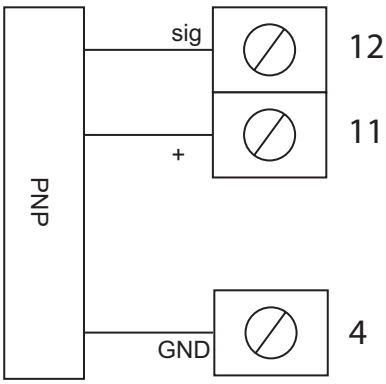

Wheel chock
PNP

TRUCK sensor

NOTE:
The truck sensor ensures greater safety during the docking process and whilst loading. When used in conjunction with a traffic light, the driver can be shown the correct position when pulling into the loading bay. Depending on the settings in the menu, a horn may also sound when the truck is detected, or the internal traffic light may signal the presence of a truck to the loader. It is also possible to open the door only when a truck is present. The functions are activated via the display or the menu.

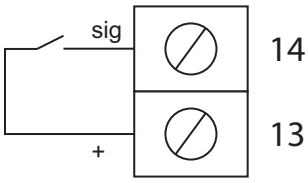

TRUCK sensor

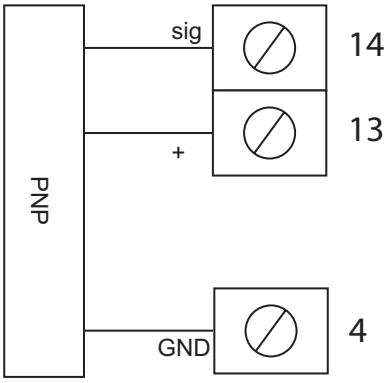

TRUCK sensor
PNP

Electrical connection

Limit switch connection for the door

NOTE:
The dock leveller can be locked via a dry contact on the door control unit or via a sensor. The control unit can be operated either via a normally open or normally closed contact. This function is activated via the display or the "Door" menu.

If this authorisation is withdrawn whilst the system is in operation, both traffic lights will turn red. In addition, an audible or visual warning signal is emitted when a connection is made at terminals 40 and 41.

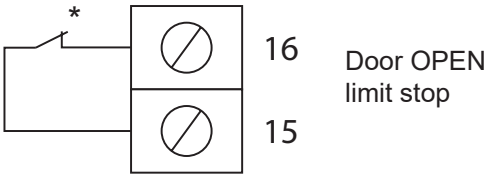

*NC or NO can be set via the menu.

Lip retracted limit stop

NOTE:
The connection for the "Lip retracted" limit stop is optional.

If this is not available, the dock leveller will only be operated according to the set operating times. The contact is triggered as an NO. signal and delivers a signal as soon as the feed lip is fully retracted.

In this position, the lowering signal is given, the aggregate is switched off and – if fitted – the green external traffic light is switched on.

This means the truck is permitted to drive off.

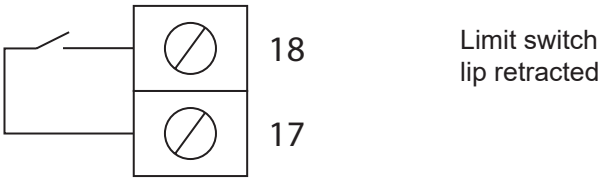

Freely programmable inputs

NOTE:
Two freely programmable inputs can be connected. This function is activated via the display or the INPUTS menu.

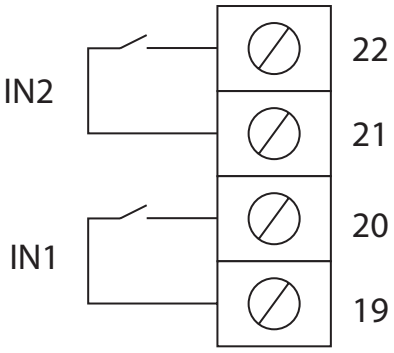

Traffic light connection 24 V DC

NOTE:
The traffic light connection is supplied as potential-free ex factory. It can be powered by connecting 24 or 230 V to the COM terminal

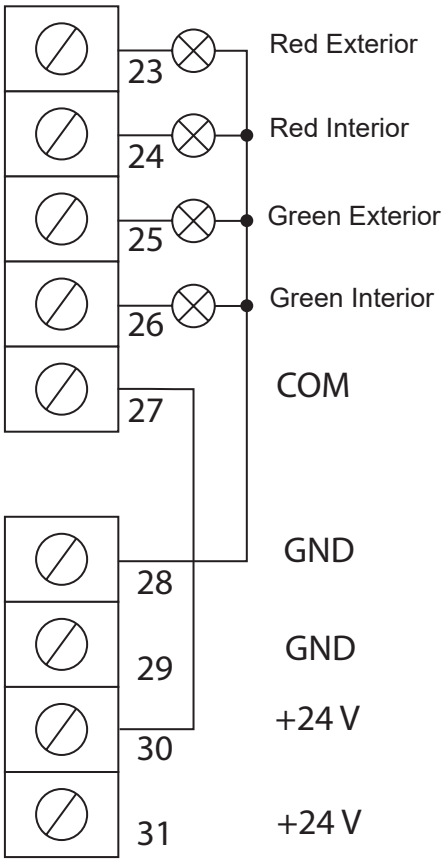

Electrical connection

Traffic light connection 230 V

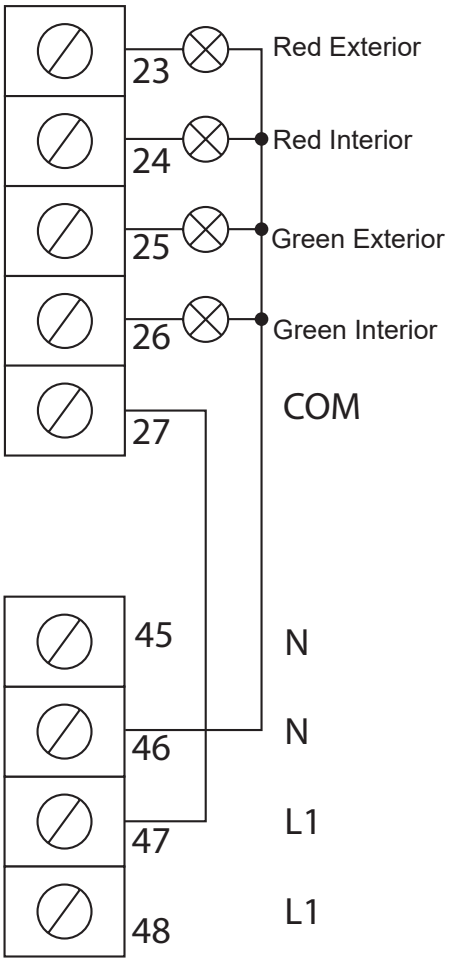

24 V for external devices

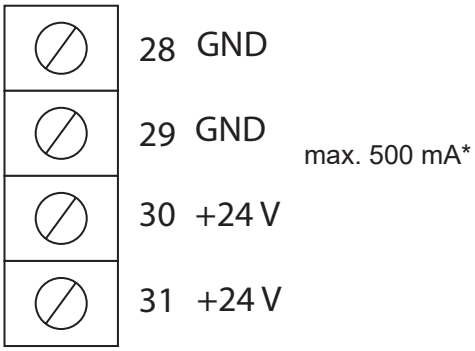

*The total drawn by the devices connected to terminals 3+4 and 28–31 must not exceed 500 mA

CLOSE – signal to door control unit

NOTE:
Once the loading process has been completed, a command to open the door can be sent automatically to the door control unit. To do this, make the following connection:

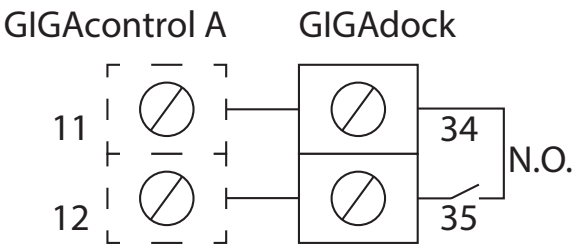

OPEN – signal to door control unit

NOTE:
Before the loading process begins, an Open signal can be sent automatically to the door control unit. To do this, make the following connection:

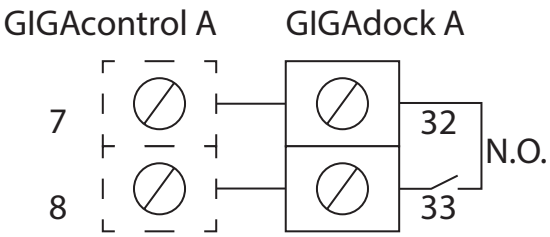

Door lock

NOTE:
The on-site door control unit can be disabled via the potential-free contact on the dock leveller. This means that the door can only be operated when the ramp is in its resting position. This prevents damage to the door and the ramp.

The type of control (normally open or normally closed) is set via the menu.

Operation is only possible if the door system has given authorisation (door open).

If this authorisation is withdrawn whilst the system is in operation, both traffic lights will turn red. In addition – provided a warning horn is connected – an audible warning signal sounds.

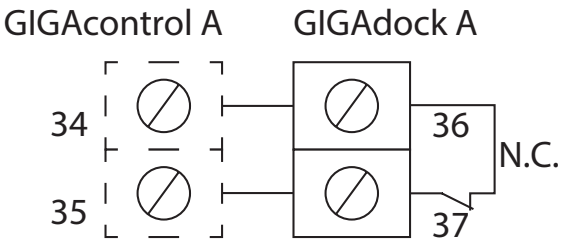

Electrical connection

Docklight 230 V

NOTE:
The docklight can be controlled manually or automatically. In manual mode, the system is switched on and off using a separate command. In automatic mode with door connection, the light switches on when the door opens and switches off again when it closes. If there is no door, the light comes on when the contact is released (with the lip retracted) and goes out as soon as the bridge returns to its resting position.

To relays 1–5

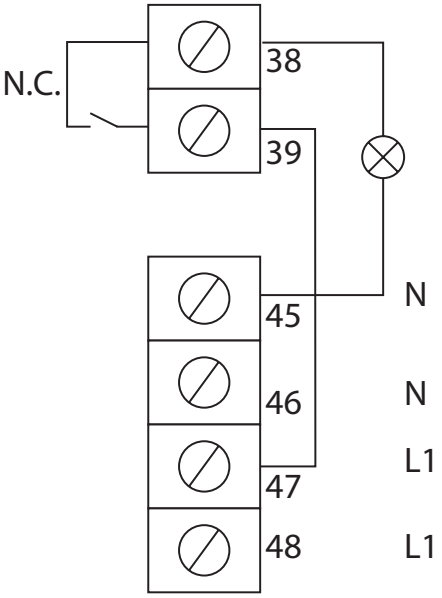

To relay 7

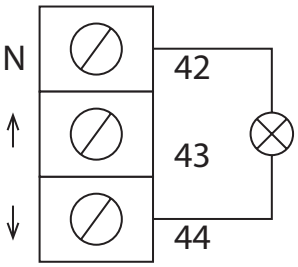

Alarm output

NOTE:
A warning horn or warning light can be connected for added safety. If the wheel chock is removed during loading or the truck sensor switches off, this is signalled by this contact. The contact is potential-free and can be connected to 24 or 230V. This function can be set via the menu.

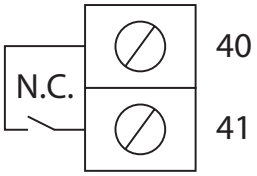

Tubular motor for door sealing

NOTE:
The gap between the truck's load compartment and the building can be sealed with a gasket. Either an inflatable version with a blower or a retractable version with a tubular motor is used.

The function is activated via the display or the menu.

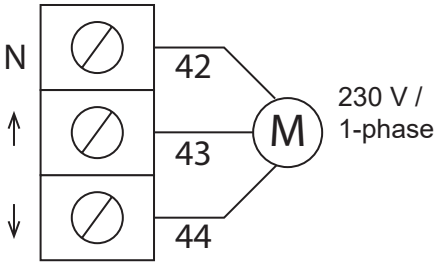

Inflatable door sealing (shelter)

NOTE:
The gap between the truck's load compartment and the building can be sealed with a gasket. Either an inflatable version with a blower or a retractable version with a tubular motor is used.

The function is activated via the display or the menu.

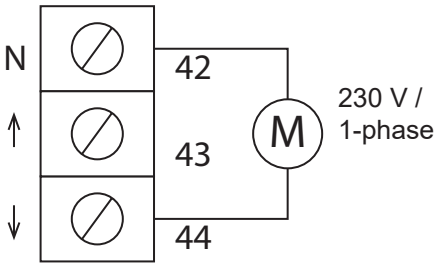

230 V for external devices

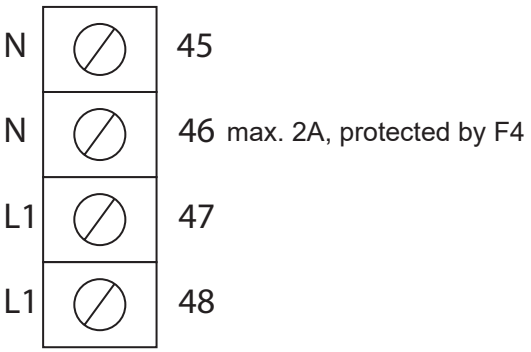

Initial operation

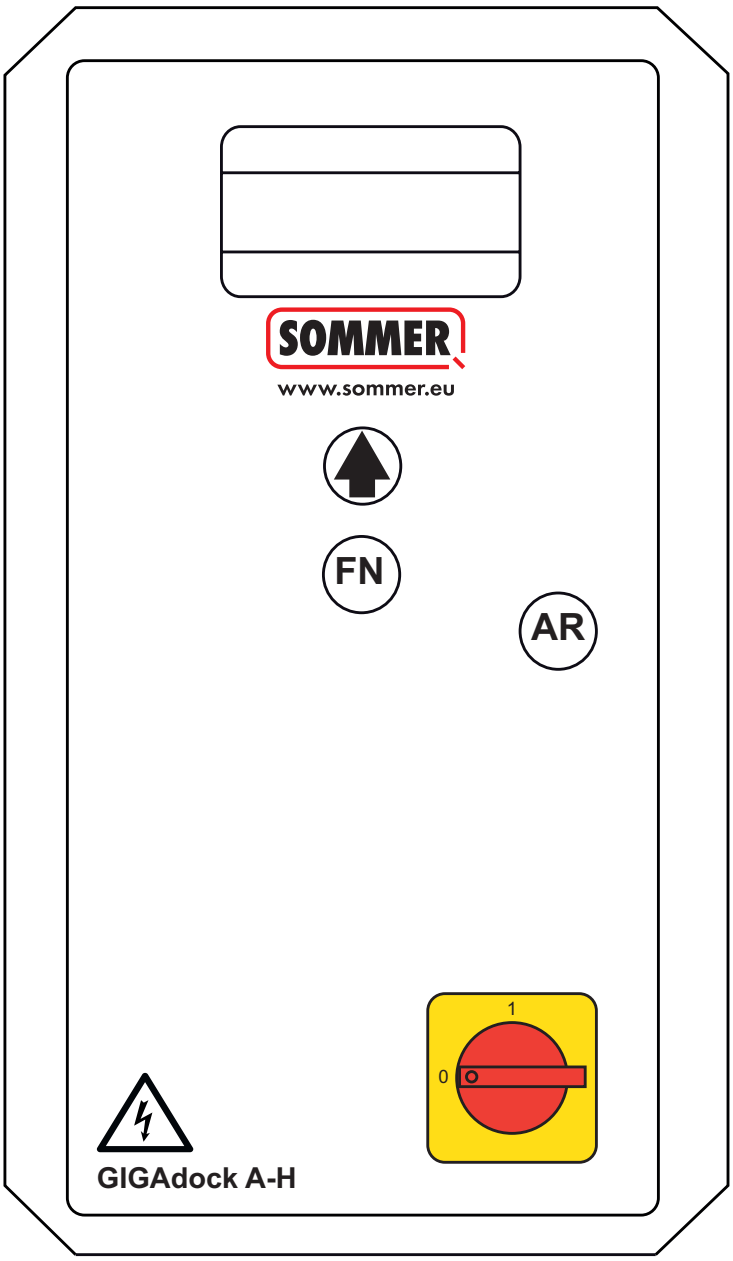

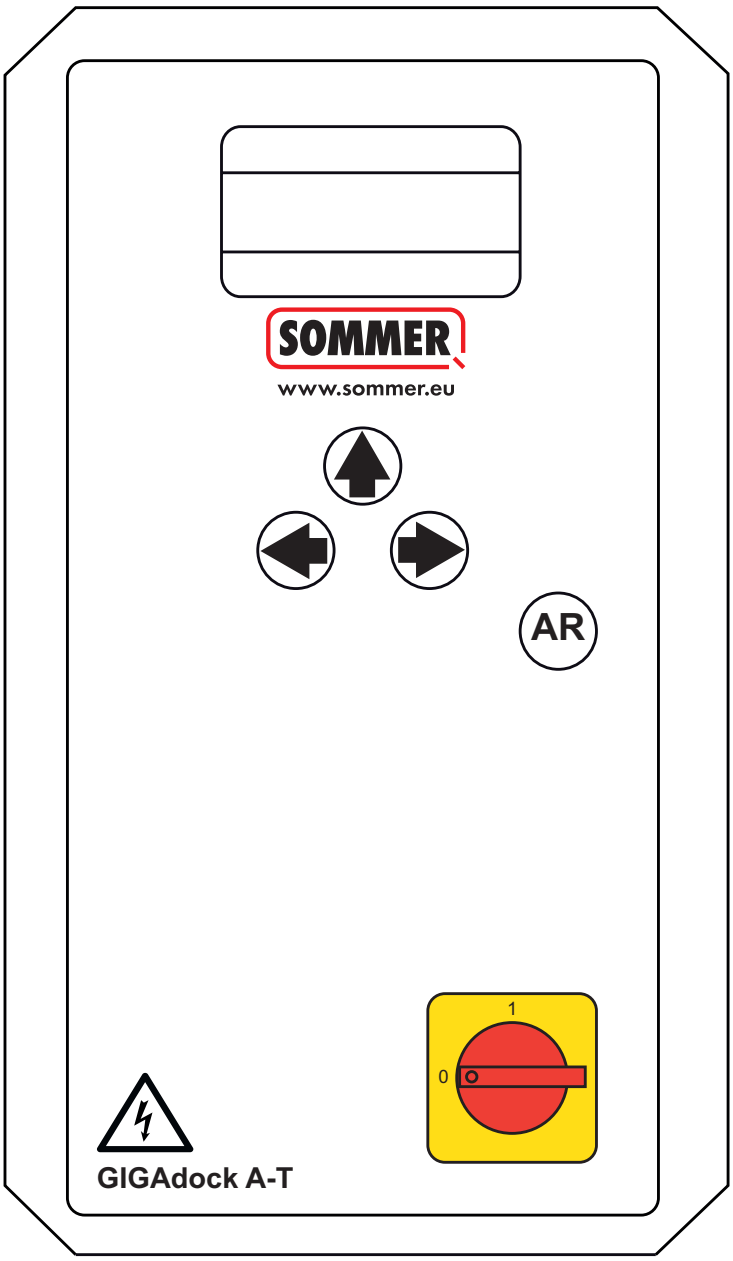

Display line 1	Operating mode or menu options
Display line 2	Information on operation or error messages
Display line 3	Recommendations for action and menu items
Arrow button(s)	Navigating the menu / Changing values / Parameters
FN button	Function button / Menu navigation / Changing values / Parameters
AR button	Select button / Confirm
Main switch	Optional

NOTE:
To access the menu, press and hold the AR button for at least 5 seconds. The password prompt will then appear.

Main menu

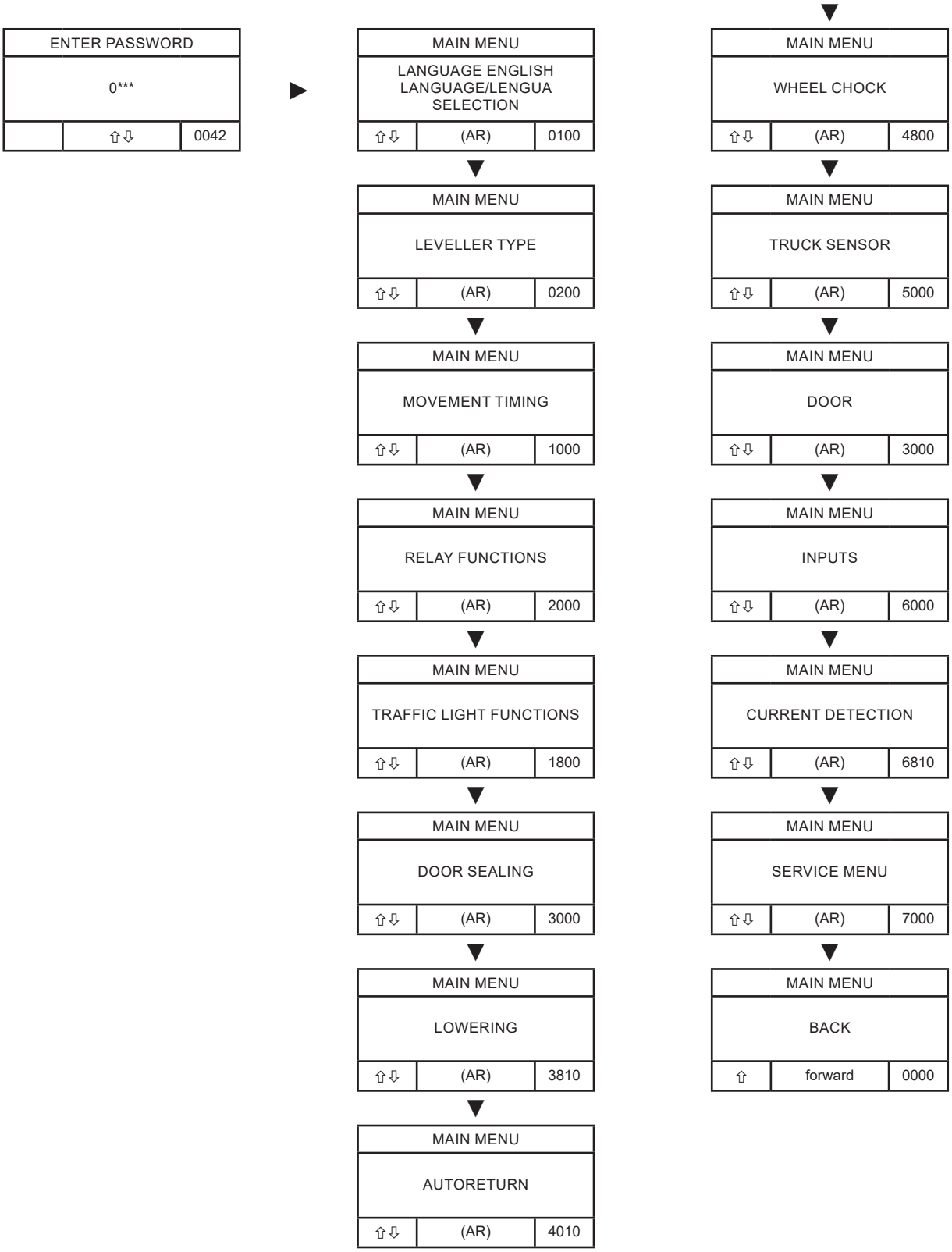
ENTER PASSWORD
0***
⇧⇩
0042
MAIN MENU
LANGUAGE ENGLISH LANGUAGE/LENGUA SELECTION
⇧⇩ (AR) 0100
MAIN MENU
LEVELLER TYPE
⇧⇩ (AR) 0200
MAIN MENU
MOVEMENT TIMING
⇧⇩ (AR) 1000
MAIN MENU
RELAY FUNCTIONS
⇧⇩ (AR) 2000
MAIN MENU
TRAFFIC LIGHT FUNCTIONS
⇧⇩ (AR) 1800
MAIN MENU
DOOR SEALING
⇧⇩ (AR) 3000
MAIN MENU
LOWERING
⇧⇩ (AR) 3810
MAIN MENU
AUTORETURN
⇧⇩ (AR) 4010
MAIN MENU
WHEEL CHOCK
⇧⇩ (AR) 4800
MAIN MENU
TRUCK SENSOR
⇧⇩ (AR) 5000
MAIN MENU
DOOR
⇧⇩ (AR) 3000
MAIN MENU
INPUTS
⇧⇩ (AR) 6000
MAIN MENU
CURRENT DETECTION
⇧⇩ (AR) 6810
MAIN MENU
SERVICE MENU
⇧⇩ (AR) 7000
MAIN MENU
BACK
⇧ forward 0000

Language

HAUPTMENÜ		
SPRACHE deutsch		
⇧⇩	(AR)	0100

▶

AUSWAHL SPRACHE		
DEUTSCH		
⇩	(AR)	0100

▼

VÝBĚR JAZYKA		
ČESKY		
⇧⇩	(AR)	0100

▼

VALG AF SPROG		
DANSK		
⇧⇩	(AR)	0100

▼

ИЗБОР НА ЕЗИК		
БЪЛГАРСКИ		
⇧⇩	(AR)	0100

▼

ΕΠΙΛΟΓΗ ΓΛΩΣΣΑΣ		
ΕΛΛΗΝΙΚΑ		
⇧⇩	(AR)	0100

▼

LANGUAGE SELECTION		
ENGLISH		
⇧⇩	(AR)	0100

▼

SELECCIÓN DE IDIOMA		
ESPAÑOL		
⇧⇩	(AR)	0100

▼

KEELE VALIK		
ESTNIS		
⇧⇩	(AR)	0100

▼

KIELIVALINTA		
SUOMI		
⇧⇩	(AR)	0100

▼

CHOIX DE LA LANGUE		
FRANÇAIS		
⇧⇩	(AR)	0100

▼

NYELVVÁLASZTÁS		
MAGYARORSZÁG		
⇧⇩	(AR)	0100

▼

SELEZIONE LINGUA		
ITALIANI		
⇧⇩	(AR)	0100

▼

언어 선택		
한국어		
⇧⇩	(AR)	0100

▼

TAALKEUZE		
NEDERLAND		
⇧⇩	(AR)	0100

▼

VALG AV SPRÅK		
NORSK		
⇧⇩	(AR)	0100

WYBÓR JĘZYKA		
PORTUGUÊS		
⇧⇩	(AR)	0100

Language

▼

VAL AV SPRÅK		
SVENSKA		
⇧⇩	(AR)	0100

▼

SELECȚIE DE LIMBĂ		
ROMAN		
⇧⇩	(AR)	0100

▼

ВЫБОР ЯЗЫКА		
RU RUSSISCH РОССИЯ		
⇧⇩	(AR)	0100

▼

DİL SEÇİMİ		
TR TÜRKISCH TÜRKÇE		
⇧⇩	(AR)	0100

▼

语言选择		
ZH CHINESISCH 中文		
⇧	(AR)	0100

Leveller type

MAIN MENU		
LEVELLER TYPE TELESCOP 3V STD		
⇧⇩	(AR)	0200

▶

LEVELLER TYPE		
3 Valve Telescop. Variant 1 standard version		
⇧⇩	(AR)	0200

▼

LEVELLER TYPE		
3 Valve Telescop. Type 2 with lowering valve		
⇧⇩	(AR)	0200

▼

LEVELLER TYPE		
3 Valve Telescop. Type 3 off in restposition		
⇧⇩	(AR)	0200

▼

LEVELLER TYPE		
3 Valve Telescop. Type 4 Laweco		
⇧⇩	(AR)	0200

▼

LEVELLER TYPE		
3 Valve Telescop. Type 5 Cobelux		
⇧⇩	(AR)	0200

▼

LEVELLER TYPE		
2 Valve Telescop. Variant 1 Standard		
⇧⇩	(AR)	0200

▼

LEVELLER TYPE		
2 Valve Telescop. Type 2 Hafa		
⇧⇩	(AR)	0200

▼

LEVELLER TYPE		
2 Valve Telescop. Type 3 Standard		
⇧⇩	(AR)	0200

▼

LEVELLER TYPE		
Hinged lip 1 valve Variant 1 standard version		
⇧⇩	(AR)	0200

▼

LEVELLER TYPE		
Hinged lip 1 valve Type 2 standard version		
⇧⇩	(AR)	0200

▼

LEVELLER TYPE		
Hinged lip 2 valve Variant 1 standard version		
⇧⇩	(AR)	0200

▼

LEVELLER TYPE		
back		
⇧		0200

Leveller type

Depending on their mechanical design and function, the following types of levellers are available:

Extension levellers with 2 or 3 valves
For extension levellers in which the platform is extended or advanced linearly.

Hinged lip levellers with 1 or 2 valves
For hinged lip levellers in which the levelling action is achieved by means of a pivoting wedge.

The correct type of leveller must be selected from the system-specific table and set accordingly. An incorrect selection may lead to incorrect movements or malfunctions.

3 Valve Telescop. V1				
Status	Pump	Lift (V1)	Lip forward (V2)	Lip back (V3)
Lift	1	1	0	0
Lowering	0	1	0	0
Lip forward	1	0	1	0
Lip back	1	0	0	1
Floating	0	1	0	0
Resting position	0	1	0	0
3 Valve Telescop. V2				
Status	Pump	Lift (V1)	Lip (V2)	Lowering (V3)
Lift	1	1	0	0
Lowering	0	0	0	1
Lip forward	1	0	0	0
Lip back	1	0	1	1
Floating	0	0	0	1
Resting position	0	0	0	1
3 Valve Telescop. V3				
Status	Pump	Lift (V1)	Lip forward (V2)	Lip back (V3)
Lift	1	1	0	0
Lowering	0	1	0	0
Lip forward	1	0	1	0
Lip back	1	0	0	1
Floating	0	1	0	0
Resting position	0	0	0	0
3 Valve Telescop. V4				
Status	Pump	Lift (V1)	Lip forward (V2)	Lip back (V3)
Lift	1	1	0	0
Lowering	0	1	0	0
Lip forward	1	0	1	0
Lip back	1	0	0	1
Floating	0	1	0	1
Resting position	0	0	0	0
3 Valve Telescop. V5				
Status	Pump	Lift (V1)	Lip forward (V2)	Lip back (V3)
Lift	1	0	0	0
Lowering	0	1	0	0
Lip forward	1	0	1	0
Lip back	1	0	0	1
Floating	0	1	0	0
Resting position	0	1	0	0

Telescop. 2 valve V1				
Status	Pump	Lift (V1)	Lip (V2)	
Lift	1	1	0	
Lowering	0	1	1	
Lip forward	1	0	0	
Lip back	1	0	1	
Floating	0	1	1	
Resting position	0	1	1	
Telescop. 2 valve V2				
Status	Pump	Lift (V1)	Lip (V2)	
Lift	1	0	1	
Lowering	0	1	0	
Lip forward	1	0	0	
Lip back	1	0	1	
Floating	0	1	0	
Resting position	0	1	0	
Telescop. 2 valve V3				
Status	Pump	Lift (V1)	Lip (V2)	
Lift	1	1	0	
Lowering	0	1	1	
Lip forward	1	0	1	
Lip back	1	0	0	
Floating	0	1	1	
Resting position	0	1	1	
Hinged lip 1 valve V1				
Status	Pump	Lift (V1)		
Lift	1	1		
Lowering	0	1		
Floating	0	1		
Resting position	0	1		
Hinged lip 1 valve V2				
Status	Pump	Lift (V1)		
Lift	1	0		
Lowering	0	1		
Floating	0	1		
Resting position	0	1		
Hinged lip 1 valve V1				
Status	Pump	Lift (V1)	Lip (V2)	
Lift	1	1	0	
After the T-lip has run out	1	0	0	
Lowering	0	0	1	
Floating	0	0	1	
Resting position	0	0	1	

Movement Timing

MAIN MENU		
MOVEMENT TIMING		
⇧⇩	(AR)	2000

▶

MOVEMENT TIMING		
LIFT MIN 2s		
⇧⇩	(AR)	1010

▼

MOVEMENT TIMING		
HOME Seq. 1 8s		
⇧⇩	(AR)	1020

▼

MOVEMENT TIMING		
HOME Seq. 2 0s		
⇧⇩	(AR)	1028

▼

MOVEMENT TIMING		
LOWERING HOME Seq. 1 15s		
⇧⇩	(AR)	1040

▼

MOVEMENT TIMING		
LOWERING HOME Seq. 2 15s		
⇧⇩	(AR)	1048

▼

MOVEMENT TIMING		
SWITCH TIME VALVE 2 0s		
⇧⇩	(AR)	1090

▼

MOVEMENT TIMING		
BACKJUMP LIP 0s		
⇧⇩	(AR)	1050

▼

MOVEMENT TIMING		
TIME MAX EXTEND LIP 25s		
⇧⇩	(AR)	1060

▼

MOVEMENT TIMING		
TIME MIN EXTEND LIP 2s		
⇧⇩	(AR)	1070

▼

MOVEMENT TIMING		
MAX. RUN TIME AGGREGATE 50S		
⇧⇩	(AR)	1100

▼

MOVEMENT TIMING		
TIME DIFFERENCE EXTEND 10 %		
⇧⇩	(AR)	1080

▼

MOVEMENT TIMING		
back		
⇧	(AR)	1000

NOTE:
Only visible for leveller types Hinged Lip and 2 valves

Movement Timing

Parameters	Explanation	Setting range	Factory setting
Minimum lift	This time determines the minimum duration for which the lift button must be held down before the extend button can be pressed. This prevents the lip from sliding over the rail's support legs and damaging them	0–10	3s
HOME Seq. 1	To return the ramp to its home position, the ramp is raised for this duration before the lip retracts	0–30	15s
HOME Seq. 2	If the ramp is to be retracted in two stages, this parameter must be set. Consequently, the ramp is first raised for Seq. 1, then the lip retracted, and then fully raised for Seq. 2	0–30	0
Lowering Home Seq. 1	Time for the first lowering into the resting position. This time also affects when the traffic lights turn green.	0–30	5
Lowering Home Seq. 2	Time to fully lower it into the resting position. This time also affects when the traffic lights turn green.	0–30	5
Lip back jump*	When the extend button is released, the lip retracts for this duration	0–5	0
Time max lip* extend	This time limit restricts the extension of the lip. After this time, no further extension is possible.	0–60	20
Time min lip* extend	The lip must be extended to at least this length before the ramp switches to the lowering mode.	0–10	2
Running time max. Aggregate	Operating time limit for the pump. If this time limit is exceeded, the contactor switches off automatically	0–100	45
Shut-off timer valve 2**	A hinged lip with 2 valves is required for the special mode in order to shut off valve 2 after a set time	0–30	5
Extend time difference	If the lip requires different times for retraction and extension, this parameter must be set. If the lip takes longer to insert, a positive value should be selected. If the insert time is shorter, a negative value should be selected	-100 to +100%	0 %

* Only visible when extending

** Only visible with Hinged lip 2 valve

Relay functions

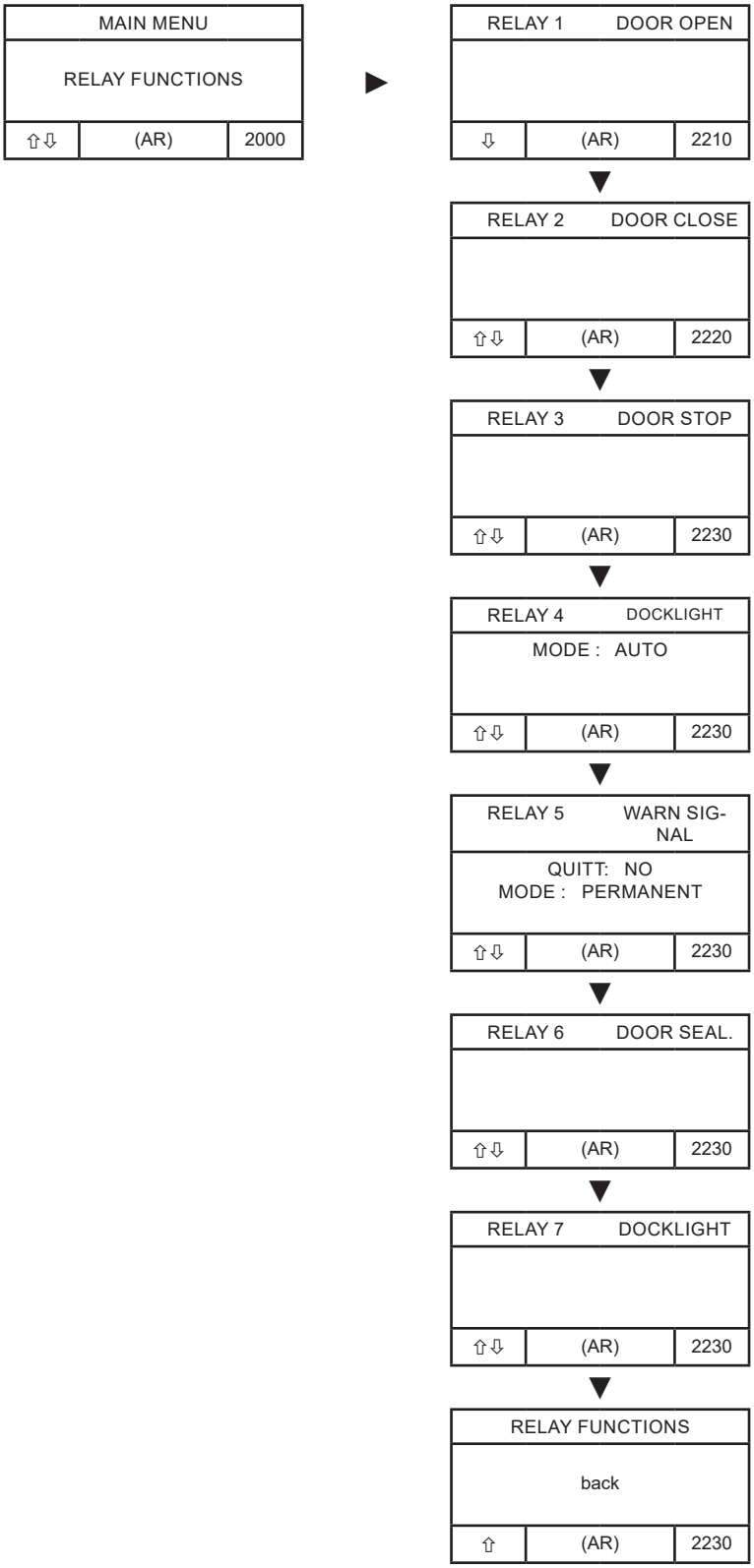

Relay functions: Output assignment

The GIGAdock A has 5 potential-free relay outputs. These are pre-programmed at the factory with the standard functions specified on the circuit board label. However, this parameter allows the relay functions to be freely reconfigured in the menu and assigned to other functions of the control unit.

Parameters	Explanation
DOOR ENABLE	Door enable to door control unit. If the door is enabled = the contact is closed.
WARN SIGNAL	**QUITT:** NO Can only be deactivated by rectifying the fault YES Can be acknowledged by pressing the AR button TIME Signal switches off after 5 minutes
	MODE: CONT. Continuous signal in the event of a fault FLASH 1 Hz flashing frequency
CLOSE-SIGNL	CLOSE-SIGNL (1s) to door control unit
OPEN SIGNL	OPEN SIGNL (1s) to door control unit
READY	If there is no fault, the contact is closed
DOCKLIGHT	Activation of a docklight MANU ON/OFF via a separate command from input 1 or 2 AUTO On when the door opens and off when the door closes If no door is present = On when leaving Home, or Off when reaching Home.

Relay	Factory setting
1	DOOR OPEN
2	DOOR CLOSE
3	DOOR STOP
4	DOCKLIGHT
3	DOOR STOP
4	DOCKLIGHT
5	WARN SIG-NAL

Relay functions 230 V

In addition to the potential-free relays, the GIGAdock A has two programmable relay outputs with direct 230 V switching. These relays can be assigned various functions in the menu. They are not potential-free and, when activated, immediately output 230 V. The two 230 V relays are pre-configured as follows ex factory:

Relay 6: Door sealing

Relay 7: Docklight

PARAMETERS	Explanation
DOOR SEALING	(Fan) The "DOORSEAL." function controls a blower motor for door sealing. This function is actually activated and configured via the "DOOR SEALING" menu parameter. Only if this parameter is configured accordingly will the assigned relay be used to control the fan. The relay therefore serves solely as an output for controlling the fan of the door sealing and operates in accordance with the DOOR SEALING logic stored in the system.
ROLLO UP	Control of the tubular motor for the door sealing The “ROLLO UP/DOWN” relay mode is used to control motorised door sealing with directional operation (up/down). This mode allows sealing to be operated in two directions of movement, Activation and function assignment are carried out via the "DOOR SEALING" menu parameter. The relay is only used in "ROLLO UP/DOWN" mode and controlled in accordance with the system logic if it is configured accordingly.
ROLLO DOWN	See "ROLLO UP"
DOCKLIGHT	Control of the docklight The "DOCKLIGHT" relay mode is used to control lighting in a loading area or loading zone. MAN In manual mode, the docklight is switched via a parametrised input (IN1 or IN2). Pressing this button switches the light on or off. AUTO The docklight switches automatically: ON when the door is opened OFF when the door closes WITHOUT DOOR CONNECTION If there is no door, control is determined by the ramp position: ON when leaving the home position OFF when the home position is reached
READY	If there is no fault, the contact is closed

Traffic light functions

MAIN MENU		
TRAFFIC LIGHT FUNCTIONS		
⇧⇩	(AR)	1800

▶

TRAFFIC LIGHT FUNCTION		
TRUCK: BLINK QUITT: AUTO		
⇩	(AR)	1810

▼

TRAFFIC LIGHT FUNCTION		
ON		
⇧⇩	(AR)	1830

TRAFFIC LIGHT FUNCTION		
BACK		
⇧	(AR)	2000

Traffic light functions

This parameter can be used to adjust the behaviour of the traffic lights.

Parameters	Explanation	Factory setting
TRAFFIC LIGHT FUNCTION	**Truck – Indication when a vehicle is docked** FLASH As soon as a truck docks, the inner red traffic light flashes. This serves to clearly indicate that a loading operation is in progress. DURATION As soon as a truck docks, the inner red traffic light remains on continuously.	BLINK
	QUITT – Enable external traffic lights (green) AUTO Once loading is complete, the green signal for the truck is automatically activated as soon as the system permits. MANU The external traffic light (green) is activated only by pressing a manual button on IN1 or IN2. No automated enabling.	AUTO
TL HOME	Behaviour in rest position ON The traffic lights (indoor and outdoor) are switched on permanently. 5 MIN The traffic lights switch off automatically 5 minutes after reaching a stationary position. 15 MIN The traffic lights switch off automatically 15 minutes after reaching a resting position. Note: If the traffic lights are switched off, they can be switched back on by the truck sensor (if activated) or by pressing any button on the control panel	ON

Door sealing

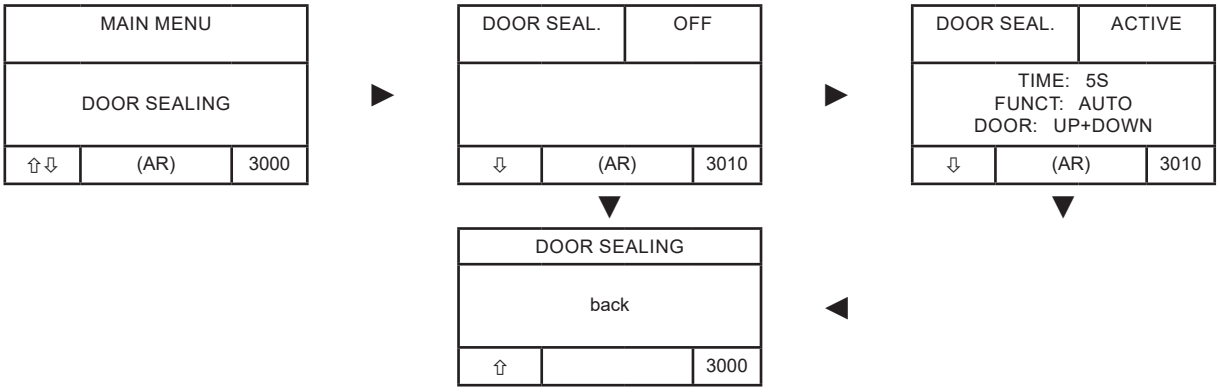

NOTE:
When the door sealing or rollo is activated, relays 6 and 7 or input 1 are automatically switched

For door sealing relay 6 = door sealing

Input 1 = Door sealing

For rollo =

Relays 6+7 = Rollo UP/DOWN

Input 1 = Door sealing

Door sealing

Parameters for activating and configuring the door sealing or rollo function

Parameters	Explanation	Setting range	Factory setting
DOOR SEALING	Selection of the connected system ACTIVE Shelter function switched on ROLLO Rollo function switched on NOT ACTIVE Sealing not active	NOT ACTIVE ACTIVE ROLLO	NOT ACTIVE
	TIME Time required to inflate or deflate the door sealing. Only after this time has elapsed can the door be opened, or the external traffic light will turn green once loading is complete	0–25	5s
	FUNCT The FUNCT parameter can be used to set the function of the door sealing (TAD) AUTO In automatic mode, the door sealer (TAD) is inflated via the shelter button at inputs IN1 or IN2. Once started, a preset time (TIME) counts down. Once this time has elapsed, authorisation is granted to the door control unit. If the automatic opening function is enabled, the door will then open automatically. The ramp can then be moved. Once loading is complete, a Close signal is automatically sent to the door – provided this has been configured. As soon as the door is fully closed, the time monitoring (TIME) starts again. Once this time has elapsed, the green indicator light on the outside will come on and the door will be locked. MANU TAD can be switched on and off manually using a push-button on IN1 or IN2	AUTO MANU	AUTO
	DOOR This parameter determines how the door behaves during shelter operation and the extent to which it is controlled automatically. OPEN + CLOSE The door is fully automated. Once authorised, an Open signal is executed, and once loading is complete, the Close signal is issued automatically. OPEN The door opens automatically only. The door must be closed manually. CLOSE The door closes automatically once loading is complete. The door is opened manually. MANU The door connection is active, but no automatic movement commands are being executed. All door movements must be activated manually. --- There is no connection to the door. The shelter operates completely independently of the door.	UP+DOWN OPEN CLOSE MANU	UP+DOWN

Lowering

MAIN MENU		
LOWERING AUTO		
⇧⇩	(AR)	3810

Lowering

This parameter is used to specify the conditions under which the ramp is lowered automatically or manually

Parameters	Explanation	Factory setting
LOWERING	AUTO The ramp lowers automatically as soon as the movement button is released. LOWERING BUTTON The ramp is lowered using a separate lower button, LIP IN The ramp is lowered by briefly pressing the LIP IN button.	AUTO

Autoreturn

MAIN MENU		
AUTORETURN ACTIVE SHORT		
⇧⇩	(AR)	4010

Autoreturn

Parameters	Explanation	Factory setting
AUTORETURN	ACTIVE SHORT Autoreturn without a two-move sequence. The ramp is raised fully and the lip is retracted ACTIVE LONG The ramp retracted in two stages via Seq1+2 OFF Autoreturn is not active. Only manual retraction is possible.	ACTIVE SHORT

Wheel chock

MAIN MENU		
WHEEL CHOCK ACTIVE		
⇧⇩	(AR)	4800

▶

WHEEL CHOCK ACTIVE		
LOCK: NO SIGNAL: NO		
⇩	(o) CHANGE	4810

▼

MAIN MENU		
back		
⇧	(AR)	4000

Wheel chock

Parameters	Explanation	Factory setting
WHEEL CHOCK	OFF Not monitored ACTIVE The wheel chock is being monitored	OFF
	LOCK=YES If the wheel chock is removed, the ramp is locked and a warning signal is given LOCK=NO If the wheel chock is removed, a warning signal is sounded. You can continue along the ramp	YES
	SIGNAL=YES The horn is activated when a truck is detected. SIGNAL=NO The horn is not activated if a truck has been detected	NO

TRUCK SENSOR

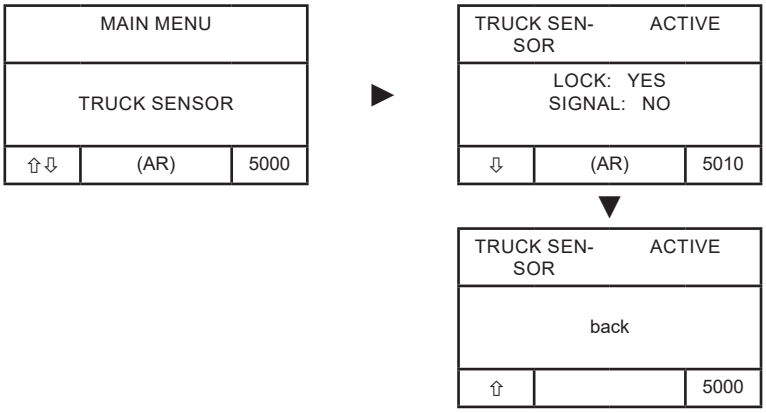

TRUCK SENSOR

Parameters	Explanation	Factory setting
TRUCK SENSOR	OFF TRUCK SENSOR not active ACTIVE TRUCK SENSOR is active	OFF
	LOCK = YES The door will only be released when a truck is docked. Otherwise, the door is locked LOCK = NO The door is unlocked even when no truck is docked	YES
	SIGNAL = YES The horn is activated when a truck is detected. SIGNAL = NO The horn is not activated if a truck has been detected	NO

Door

MAIN MENU		
DOOR		
⇧⇩	(AR)	5800

▶

DOOR ACTIVE		
SIGNAL: N.O. OPEN: YES CLOSE: YES		
⇩	(AR)	5810

▼

DOOR		
back		
⇧	(AR)	5800

Door

This parameter is used to specify whether a door is present, how its end position is monitored, and whether automatic movement commands are triggered.

Parameters	Explanation	Factory setting
DOOR	ACTIVE A door is present and is monitored and controlled by the control system. OFF No door lock is active. The ramp can be operated independently of the door.	ACTIVE
	SIGNAL – Feedback: Door "OPEN" Defines the behaviour of the feedback signal for the "door open" end position: N.O. (Normally open contact) When the door is not open, the contact is open. When the "OPEN" end position is reached, the contact closes. N.C. (Normally closed contact) When the door is not open, the contact is closed. When the "OPEN" end position is reached, the contact opens.	N.O.
	OPEN SIGNL – Open door If the ramp is in its resting position, the door can be opened using the "Lift" button. When the "Lift" button is pressed, the "Door OPEN" relay is activated for 1 second.	YES
	CLOSE-SIGNL – Close door Specifies when and how the door is to be closed after loading: NO There is no automated "CLOSE-SIGNL". YES Once loading is complete and the ramp is in the home position, a CLOSE signal (1 second) is automatically sent to the door control unit. AR If the ramp is in the home position, pressing the AR button again will trigger a CLOSE signal (1 second) to the door.	YES

Inputs

MAIN MENU		
INPUTS		
⇧⇩	(AR)	6000

▶

INPUT 1 DOOR SEAL.		
SIGNAL: N.O.		
⇩	(AR)	6010

▼

INPUT 2 TRAFFIC LIGHT		
SIGNAL: N.O.		
⇧⇩	(AR)	6020

▼

LIMIT SWITCH LIP		
SIGNAL N.O.		
⇧⇩	(AR)	6090

INPUTS		
back		
⇧	(AR)	6000

NOTE:
The factory settings for the inputs are as follows:

Input 1 = Shelter ON/OFF

Input 2 = Traffic light acknowl-edgement

Inputs

Parameters	Explanation	Factory setting
SHELTER	Button for shelter control Contact types: N.O. or N.C.	N.O.
TRAFFIC LIGHT	Button for traffic light acknowledgement Contact types: N.O. or N.C.	N.O.
DOCKLIGHT	ON/OFF switch for docklight Contact types: N.O. or N.C.	N.O.
DOOR CLOSE	The limit stop for the door is CLOSED Contact types: N.O. or N.C.	N.O.

Current detection

MAIN MENU		
CURRENT DETECTION LEVEL 5		
⇧⇩	(AR)	6810

Current detection

Overcurrent cut-out

This parameter is used to set the sensitivity of the overcurrent detection. The control unit monitors the motor current and detects an overcurrent as soon as the set threshold value is reached.

Parameters	Explanation	Factory setting
CURRENT DETECTION	The setting is adjusted in steps from 0 to 10 and defines the percentage of the maximum permissible current. 0 = Overcurrent detection disabled 1 = 5% 2 = 15% 3 = 25% 4 = 35% 5 = 45% 6 = 55% 7 = 65% 8 = 75% 9 = 85% 10 = 95% The set value determines the maximum permissible rise in current before the control unit detects an overcurrent condition and responds accordingly. In addition, current detection is used in Auto-Return mode: During the transition from lifting to lowering, overcurrent detection enables the end position to be detected at an early stage, so that the lowering process can be initiated more quickly.	5

Service menu

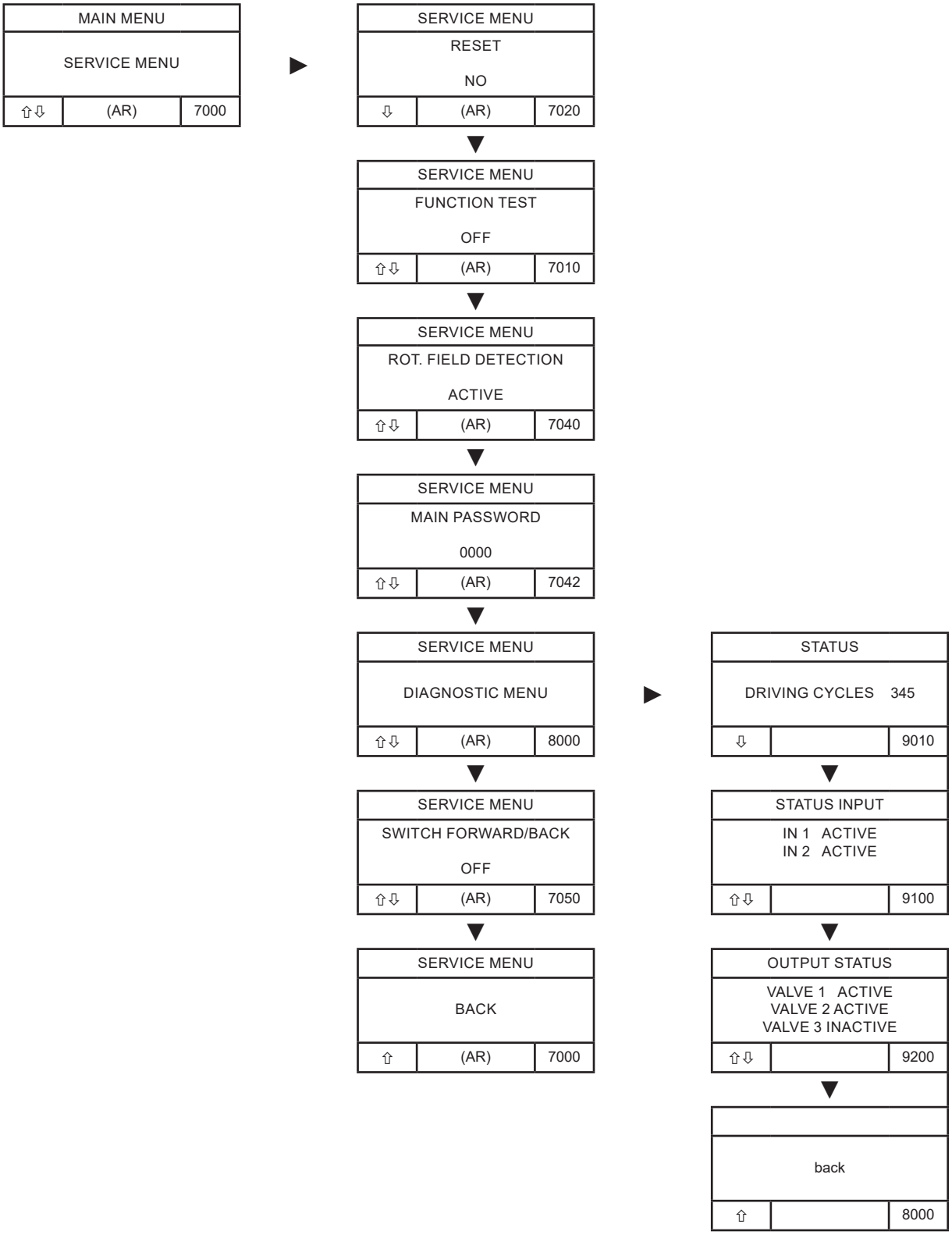

Service menu

Parameters	Explanation	Factory setting
RESET	Reset all parameters to their factory settings	NO
FUNCTION TEST	Once the FUNCTION TEST has been activated, all driving functions are enabled for a period of 10 seconds. During this period, the ramp's movements (lifting, lowering, and moving forwards and backwards) can be triggered directly using the buttons. The function operates independently of current position statuses or safety checks such as the truck sensor or WHEEL CHOCK. This makes it possible to test all buttons and outputs directly. If no button is pressed within 10 seconds, the BUTTON CHECK function deactivates automatically.	OFF
ROT. FIELD DETECTION	Phase monitoring The ramp control system features integrated phase failure and rotating field detection. This parameter can be used to enable or disable this function. If monitoring is enabled, the control system continuously checks that all phases are present and that the phase sequence is correct (clockwise rotating field). As soon as a phase is missing or an incorrect rotating field is detected, a fault is triggered immediately and operation is halted. OFF Phase and rotating field detection is disabled. ACTIVE The phase sequence (clockwise rotating field) and the presence of all phases are monitored. Any deviations will trigger an immediate fault alert.	ACTIVE
PASSWORD	This parameter can be used to change or view the password required to access the menu.	0000
DIAGNOSTIC MENU	Input and output diagnosis The diagnostic menu allows you to view all input and output states of the ramp control. Changes to the input are displayed in real time (live display), enabling rapid analysis and troubleshooting. This menu can be used to check the current status of all signals in order to identify wiring faults or sensor problems	
SWITCH FORW./ BACK	Adjusting the direction of travel This parameter allows the "Lip FORWARD" and "Lip BACK" buttons to be swapped for the movement. This setting is used when, for example, the ramp control is mounted on the left-hand side of the wall, thereby allowing for intuitive control of the direction of travel.	OFF

EG-Einbauerklärung

für den Einbau einer unvollständigen Maschine
nach der Maschinenrichtlinie 2006/42/EG, Anhang II Teil 1 B

SOMMER Antriebs- und Funktechnik GmbH
Hans - Böckler - Straße 27
73230 Kirchheim unter Teck
Deutschland

erklärt hiermit, dass die Laderampensteuerung

GIGAdock A

in Übereinstimmung mit der

- Maschinenrichtlinie 2006/42/EG
- Niederspannungsrichtlinie 2014/35/EU
- Richtlinie für elektromagnetische Verträglichkeit 2014/30/EU
- RoHS Richtlinie 2011/65/EU
- Verordnung (EU) 2024/1781 (ESPR)

entwickelt, konstruiert und gefertigt wurde.

Folgende Normen wurden angewandt:

• EN1398:2009	Ladebrücken - Sicherheitsanforderungen
• EN 60335-1:2016-06, soweit anwendbar	Sicherheit von elektr. Geräten
• EN 61000-6-3:2011-09	Elektromagnetische Verträglichkeit (EMV) - Störaussendung
• EN 61000-6-2:2019-11	Elektromagnetische Verträglichkeit (EMV) - Störfestigkeit

Die speziellen technischen Unterlagen wurden nach Anhang VII Teil B erstellt und werden den Behörden auf Verlangen elektronisch übermittelt.

Die unvollständige Maschine ist nur zum Einbau in eine Überladebrückenanlage bestimmt, um somit eine vollständige Maschine im Sinne der Maschinenrichtlinie 2006/42/EG zu bilden. Die Anlage darf erst in Betrieb genommen werden, wenn festgestellt wurde, dass die gesamte Anlage den Bestimmungen der o. g. EG-Richtlinien entspricht.

Bevollmächtigter für das Zusammenstellen der technischen Unterlagen ist der Unterzeichner.

Kirchheim, den 08.05.2026

i.V.

Jochen Lude
Dokumentenverantwortlicher

SOMMER Antriebs- und Funktechnik GmbH
Hans-Böckler-Straße 27
73230 Kirchheim
Germany

info@sommer.eu
www.sommer.eu

All rights reserved